ESP32 LedRingDriver

V1.I1

2026-01-07

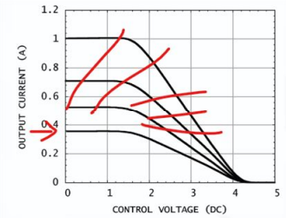

LED Driver

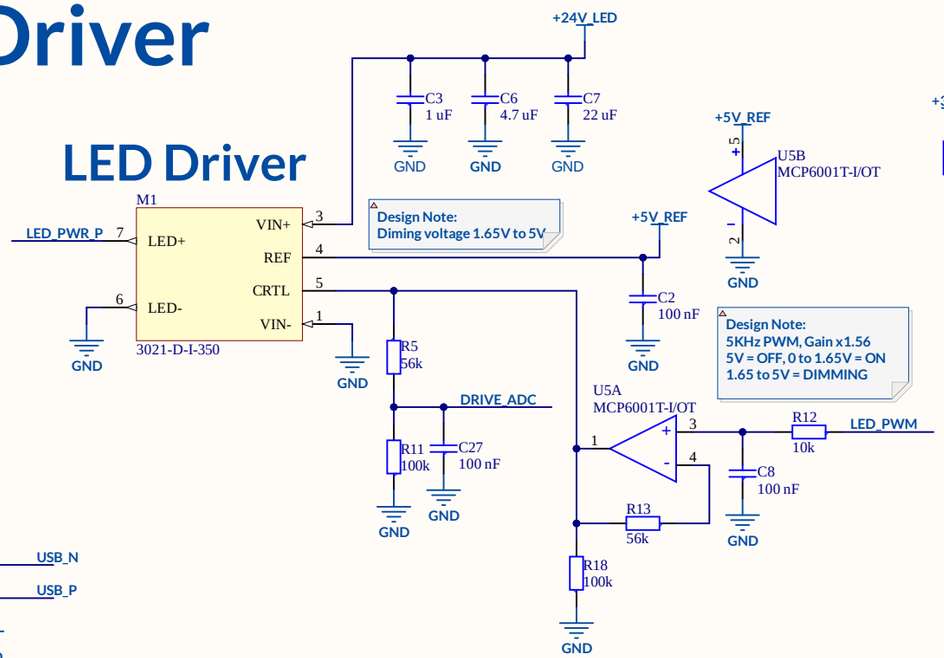

MCU

ESP32-S3-WROOM-1-N16R8

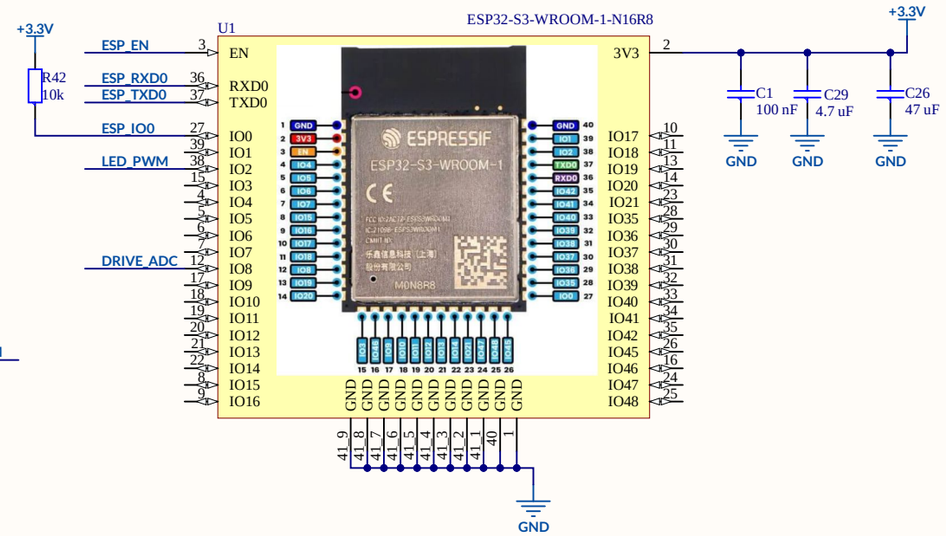

USB

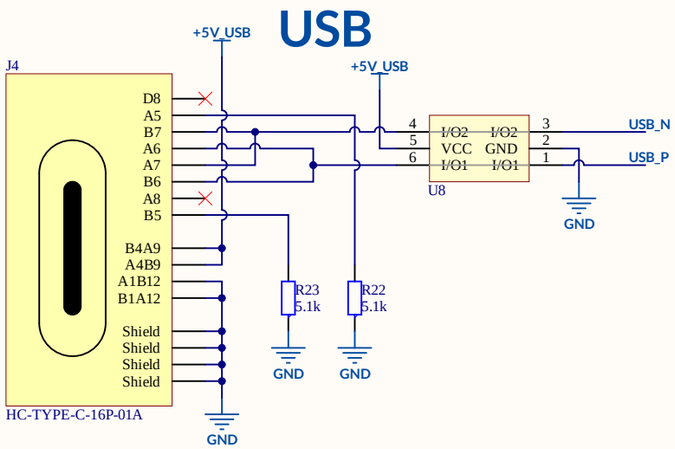

Serial Interface

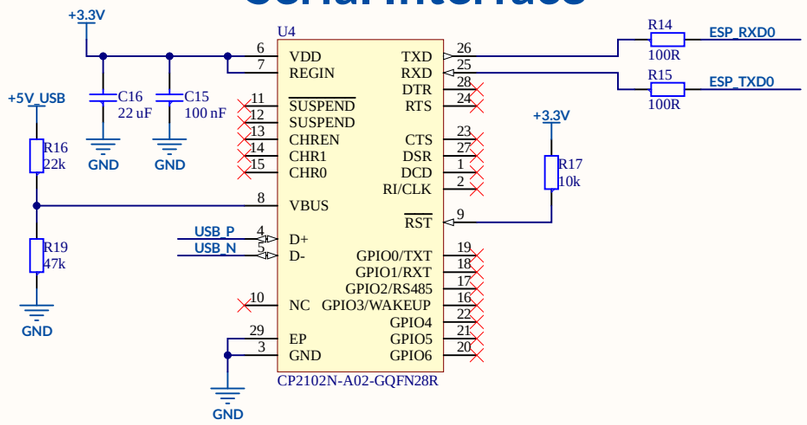

Reset

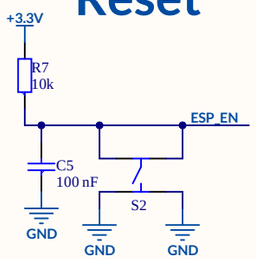

Boot

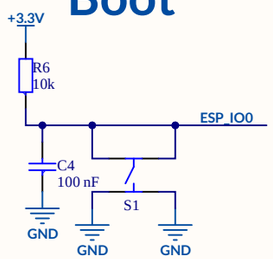

Step Up Regulator

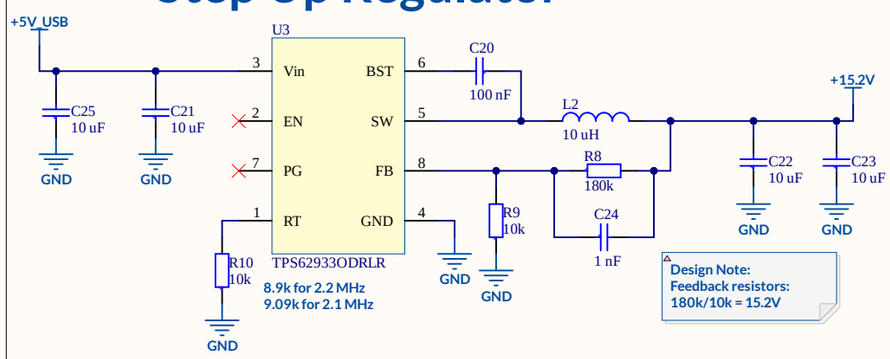

Mounting holes

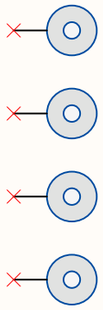

Fiducials

PCB Symbol Project Title

PCB Symbol Project Version

PCB Symbol Release Date

+3.3V Regulator

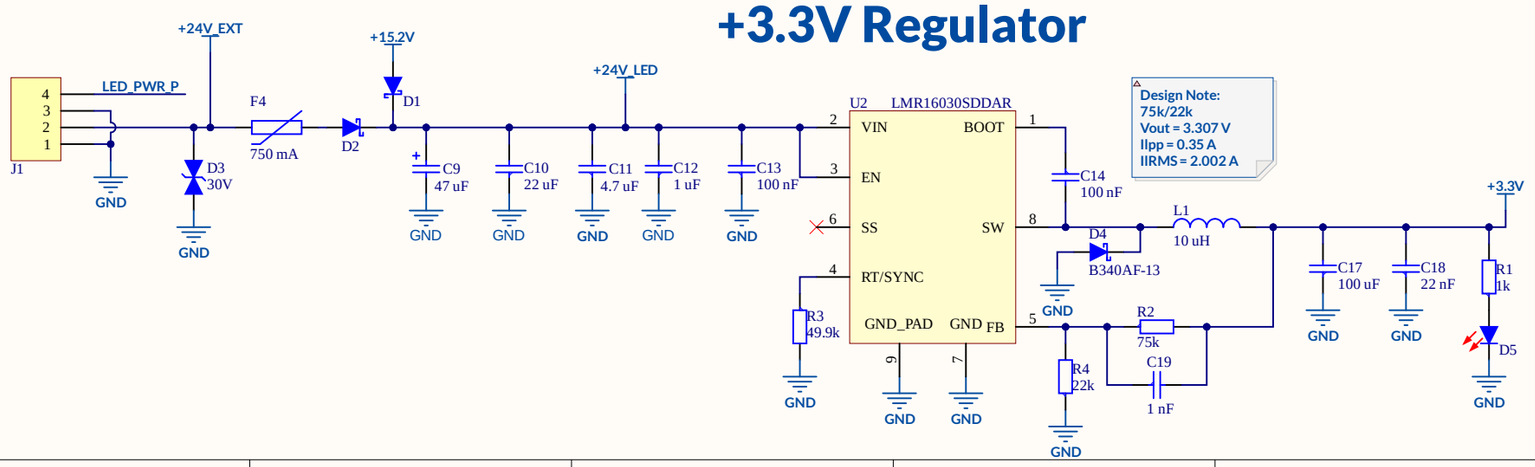

ESP32 LedRingDriver

[01]MCU.SchDoc

Page: 2 of 3	Logic Trace Kumiciceva 41/B 51000, Rijeka Croatia
Version: V1.I1	
Released: 2026-01-07	

Component list

ESP32 LedRingDriver

Project:	ESP32 LedRingDriver	Quantity: 100	Logic Trace
Version:	V1.I1		Filip Žic
Release Date:	2026-01-07		Kumičićeva 41/B
Variant:	AssemblyVariant		Rijeka, Croatia

#	LibRef	Designator	Description	Category	Value	Manufacturer	Manufacturer Part Number	Supplier 1	Supplier Part Number 1	Quantity	Price	Total
1	CL10B102KB8NNNC	C19,C24	Capacitor, 0603, MLCC, 1 nF, 50 V, ± 10%, X7R	Capacitors	1 nF	Samsung	CL10B102KB8NNNC	LCSC	C1588	2	0,0028	0,56
2	CL10A105KB8NNNC	C3,C12	Capacitor, 0603, MLCC, 1 uF, 50 V, ± 10%, X5R, CL Series	Capacitors	1 uF	Samsung Electro-Mehanics	CL10A105KB8NNNC	LCSC	C15849	2	0,005	1
3	CL10B223KB8NNNC	C18	Capacitor, 0603, MLCC, 22 nF, 50 V, ±10%, X7R	Capacitors	22 nF	Samsung	CL10B223KB8NNNC	LCSC	C21122	1	0,0043	0,43
4	CL10A226MO7JZNC	C16	Capacitor, 0603, MLCC, 22 uF, 16 V, ± 10%, X5R, CL Series	Capacitors	22 uF	Samsung Electro-Mehanics	CL10A226MO7JZNC	LCSC	C2762594	1	0,005	0,5
5	CL10B104KB8NNNC	C1,C2,C4,C5,C8,C13,C14,C15,C20	Capacitor, 0603, MLCC, 100 nF, 50 V, ± 10%, X7R	Capacitors	100 nF	Samsung	CL10B104KB8NNNC	LCSC	C1591	10	0,0025	2,5
6	0805F475M500NT	C6,C11,C29	Capacitor, 0805, MLCC, 4.7 uF, 50 V, ± 20%, Y5V	Capacitors	4.7 uF	FH(Guangdong Fenghua Advar	0805F475M500NT	LCSC	C215908	3	0,0137	4,11
7	CL21A106KAYNNNE	C21,C22,C23,C25	Capacitor, 0805, MLCC, 10 uF, 25 V, ± 10%, X5R, CL Series	Capacitors	10 uF	Samsung Electro-Mehanics	CL21A106KAYNNNE	LCSC	C15850	4	0,0131	5,24
8	GRM21BR61A476ME15L	C26	Capacitor, 0805, MLCC, 47 uF, 10 V, ± 20%, X7R	Capacitors	47 uF	Murata Electronics	GRM21BR61A476ME15L	LCSC	C124129	1	0,0981	9,81
9	C3216X5R1V226MTJ00E	C7,C10	Capacitor, 1206, MLCC, 22 uF, 35 V, ± 20%, X5R	Capacitors	22 uF	TDK	C3216X5R1V226MTJ00E	LCSC	C342620	2	0,2384	47,68
10	CL31A107MQHNNNE	C17	Capacitor, 1206, MLCC, 100 uF, 6.3 V, ± 20%, X5R	Capacitors	100 uF	Samsung	CL31A107MQHNNNE	LCSC	C15008	1	0,0454	4,54
11	VEJ470M1HTR-0607	C9	Capacitor, Electrolytic, SMD, 47 uF, 50 V, ± 20%, Radial, 6.3	Capacitors	47 uF	Lelon	CS1C101M-CRE54	LCSC	C134775	1	0,0432	4,32
12	DB127V-5.0-4P-GN-S	J1	Connector, Terminal Block, 300V, 16A, 5.0 pitch, 4 pin	Connectors	4Pin	DORABO	DB127V-5.0-4P-GN-S	LCSC	C430624	1	0,2632	26,32
13	HC-TYPE-C-16P-01A	J4	Connector, USB C type, 16p	Connectors, USB	Type C	HCTL	HC-TYPE-C-16P-01A	LCSC	C2894897	1	0,0656	6,56
14	B340AF-13	D1,D2,D4	Diode, DO-214AC, Schottky Rectifier, 40 V, 3 A, 500 mV, 6	Diodes	3:00 AM	DIODES INC.	B340AF-13	LCSC	C172880	3	0,0833	24,99
15	SMCJ30CA	D3	Diode, SMC-DO-214AB, Bidirectional TVS, 30V, 31± A, 15	Diodes	30V	Littelfuse	SMCJ30CA	LCSC	C151281	1	0,1796	17,96
16	USBLC6-2SC6	U8	ESD Protection Devices, TVS Array, SOT23-6, 5V, 6A, 0.5p	ESD Protection Devices	ESD 5V, 6A	TECH PUBLIC	USBLC6-2SC6	LCSC	C2827654	1	0,05	5
17	ESP32-S3-WROOM-1-N16R8	U1	ESP32 WROOM Module, 16 MB FLASH, 8MB PRSAM, PC	Modules	2.4GHz Wifi Module	Espressif Systems	ESP32-S3-WROOM-1-N16R8	LCSC	C2913202	1	3,88	388
18	SMD2920P075TF/60	F4	Fuse, F2920, PTC resettable, 750 mA hold, 1.5 A trip, 60 V	Fuses	750 mA	RUILON	SMD2920P075TF/60	LCSC	C47513	1		0
19	MCP6001T-I/OT	U5	IC, OPAMP, SOT23-5, 1MHz, 1.8 V to 6 V, 100 uA, Low Power, Rail-to-Rail input and	1 MHz		Microchip Technology	MCP6001T-I/OT	LCSC	C116490	1	0,2762	27,62
20	CP2102N-A02-GQFN28R	U4	IC, USB 2.0 to UART Protocol Converter with GPIO, 28-Pi	Integrated Circuits	USB to UART	Microchip	CP2102N-A02-GQFN28R	LCSC	C964632	1		0
21	TPS62933ODRLR	U3	IC, Voltage Regulator, DC-DC Switching Boost Regulator	Regulators, Switching		Texas Instruments	TPS62933ODRLR	LCSC	C6290372	1	0,7678	76,78
22	LMR16030SDDAR	U2	IC, Voltage Regulator, DC-DC Switching Buck Regulator,	Regulators, Switching	3A	Texas Instruments	LMR16030SDDAR	LCSC	C136648	1	0,48	48
23	TFM322512ALMA100MTAA	L2	Inductor, 1210, 10 uH, 1.2 A, 305 mΩ, ±20%	Inductors	10 uH	TDK	TFM322512ALMA100MTAA	LCSC	C2047632	1	0,417	41,7
24	PSPMAA0805-100M-ANP	L1	Inductor, 8050, 10 uH, 6 A RMS, 10 A Satturation, 30 mΩ to	Inductors	10 uH	PROD Tech	PSPMAA0805-100M-ANP	LCSC	C2962885	1	0,1898	18,98
25	KT-0603R	D5	Led Diode, 0603, Red, 20 mA, 2.2V, 120 mcd	Led Diodes	Red	Hubei KENTO Elec	KT-0603R	LCSC	C2286	1	0,0051	0,51
26	3021-D-I-350	M1	Module, Led Driver,SIP-7, 7V to 32V in, 350mA, Dimable	Modules	350 mA	LEDdynamics	3021-D-I-350	LCSC	C17682765	1	35	3500
27	Fiducial	F1,F2,F3	PCB, Fiducial 1mm/3mm naked	PCB, Fiducials						3		0
28	0603WAF1001T5E	R1	Resistor, 0603, 1 kohm, 75 V, Thick Film, 100 mW, 1%, 100	Resistors	1k	UNI-ROYAL	0603WAF1001T5E	LCSC	C21190	1	0,0005	0,05
29	0603WAF5101T5E	R22,R23	Resistor, 0603, 5.1 kohm, Thick Film, 100 mW, 1%, 100 ppm	Resistors	5.1k	Uniroyal Elec	0603WAF5101T5E	LCSC	C23186	2	0,001	0,2
30	0603WAF1002T5E	R6,R7,R9,R10,R12,R17,R42	Resistor, 0603, 10 kohm, 75 V, Thick Film, 100 mW, 1%	Resistors	10k	UNI-ROYAL(Uniroyal Elec)	0603WAF1002T5E	LCSC	C25804	7	0,0005	0,35
31	0603WAF2202T5E	R4,R16	Resistor, 0603, 22 kohm, Thick Film, 100 mW, 1%, 100 ppm	Resistors	22k	UNI-ROYAL(Uniroyal Elec)	0603WAF2202T5E	LCSC	C31850	2	0,0009	0,18
32	0603WAF4702T5E	R19	Resistor, 0603, 47 kohm, Thick Film, 75V, 100 mW, ±1%, 10	Resistors	47k	Uniroyal Elec	0603WAF4702T5E	LCSC	C25819	1	0,0009	0,09
33	0603WAF4992T5E	R3	Resistor, 0603, 49.9 kohm, Thick Film, 100 mW, 1%, ±100 p	Resistors	49.9k	Uniroyal Elec	0603WAF4992T5E	LCSC	C23184	1	0,001	0,1
34	0603WAF5602T5E	R5,R13	Resistor, 0603, 56 kohm, Thick Film, 100 mW, 1%, ±100 pp	Resistors	56k	Uniroyal Elec	0603WAF5602T5E	LCSC	C23206	2	0,001	0,2
35	0603WAF7502T5E	R2	Resistor, 0603, 75 kohm, Thick Film, 75V, 100 mW, ±1%, 10	Resistors	75k	Uniroyal Elec	0603WAF7502T5E	LCSC	C23242	1	0,0009	0,09
36	RT0603FRE07100KL	R11,R18	Resistor, 0603, 100 kohm, Thin Film, 100 mW, 1%, 50 ppm	Resistors	100k	YAGEO	RT0603FRE07100KL	Mouser	603-RT0603FRE07100KL	2	0,007	1,4
37	0603WAF1000T5E	R14,R15	Resistor, 0603, 100 ohm, 75 V, Thick Film, 100 mW, 1%, 200	Resistors	100R	UNI-ROYAL(Uniroyal Elec)	0603WAF1000T5E	LCSC	C22775	2	0,0009	0,18
38	0603WAF1803T5E	R8	Resistor, 0603, 180 kohm, Thick Film, 75V, 100 mW, ±1%, 1	Resistors	180k	Uniroyal Elec	0603WAF1803T5E	LCSC	C22827	1	0,0009	0,09
39	PTS810SJM250SMTRLFS	S1,S2	Switch, SMD, 4.2 x 3.2 mm, 2.5mm height, 16V, 50mA	Switches	5W	C&K	PTS810SJM250SMTRLFS	Mouser	611-PTS810SJM250SMTR	2	0,247	49,4
Approved								Notes				4315,44

M4
J4
S2
C5
R7
R23
R22
C26
C29
C1
C16
C15
U8
R14
R19
R15
R16
U4
R18
R13
R17
C8
C2
U5
R11
R12
C27
R5
M1
U1
D5
R1
M3
S1
C4
R6
R42
ESP32 LedRingDriver
V1.1
2026-01-07
GND
L1
C17
C3
C6
C7
C9
C10
C18
D2
F4
D1
C11
D4
U2
C19
R2
R3
R4
C14
C22
C21
C25
C13
C12
C23
R10
U3
R9
D3
J1
M5
L7
R8
C24
C20
M2